Recommended RT300 DCU Connections Plan

all external connections except Power Supply
and Antenna are optional

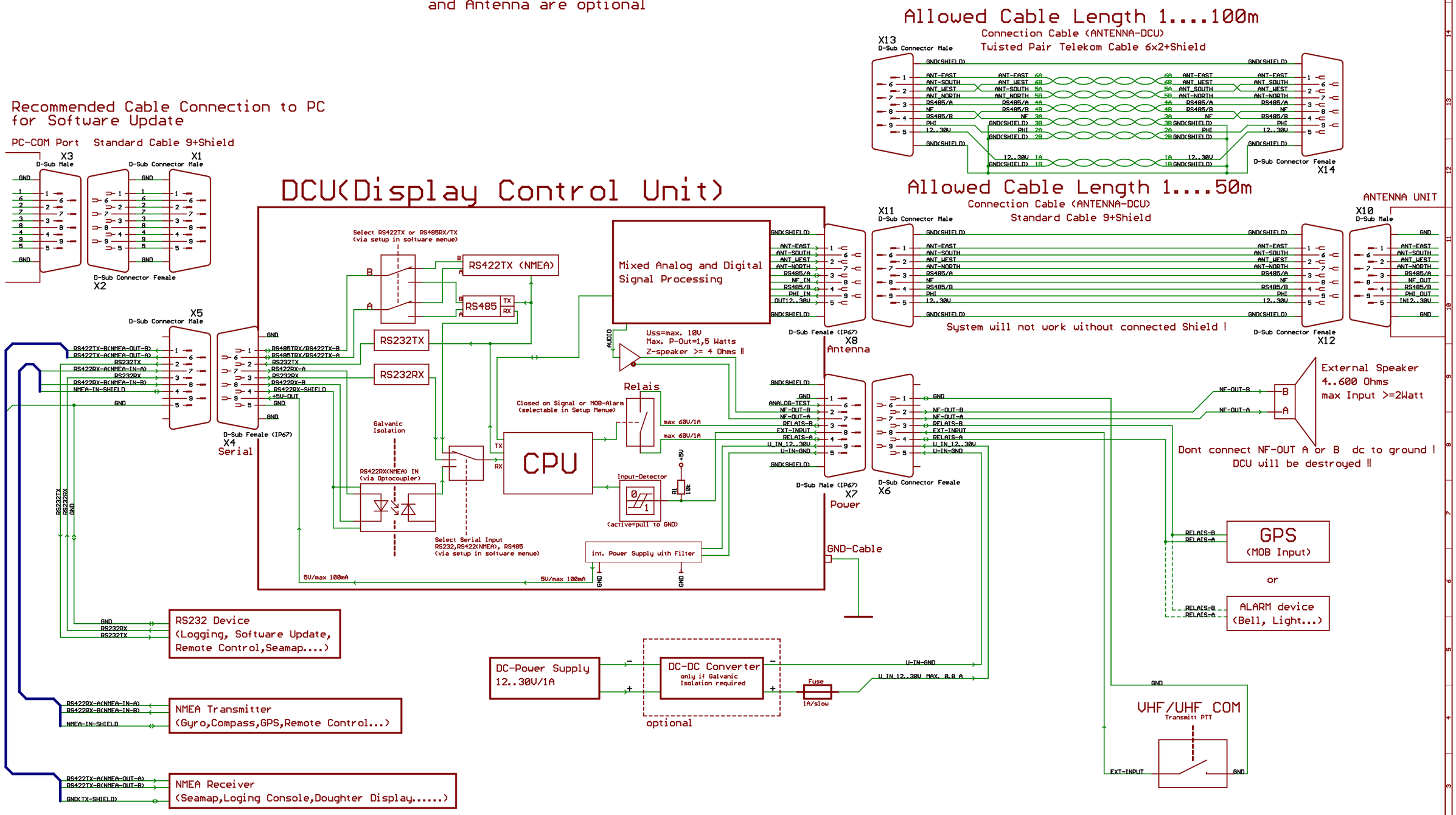

For other external connections contact Rhotheta
DCU could be damaged !!

Revision Date			ChangeIndex Date	Checked Date	Name
01.00	0	A		16.10.2003	F. Boehm
01.01	1	B		11.02.2005	F. Boehm
	2	C			
	3	D			
	4	E			
	5	F			
	6	G			

RHO THETA Elektronik GmbH
Internet: www.rhotheta.de

Project: RT300

RT300 DCU Connections

Designation:

Drawing No.:

Last Edit: 11.02.2005 11:54:01
Printed: 11.02.2005 11:57:36
Filename: Power-Serial-Antenna

Page: 1/1